LUHA
FAÇADE SOLUTIONS

Q-VENT

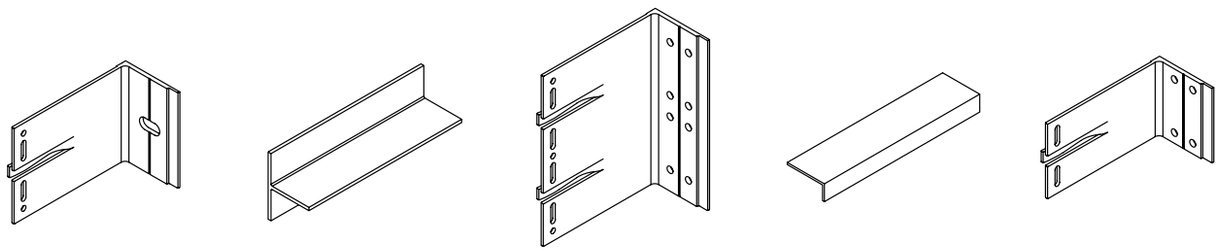

PRODUCT LIST

ARCHITECTURAL RAINSCREEN SYSTEMS

10/2025

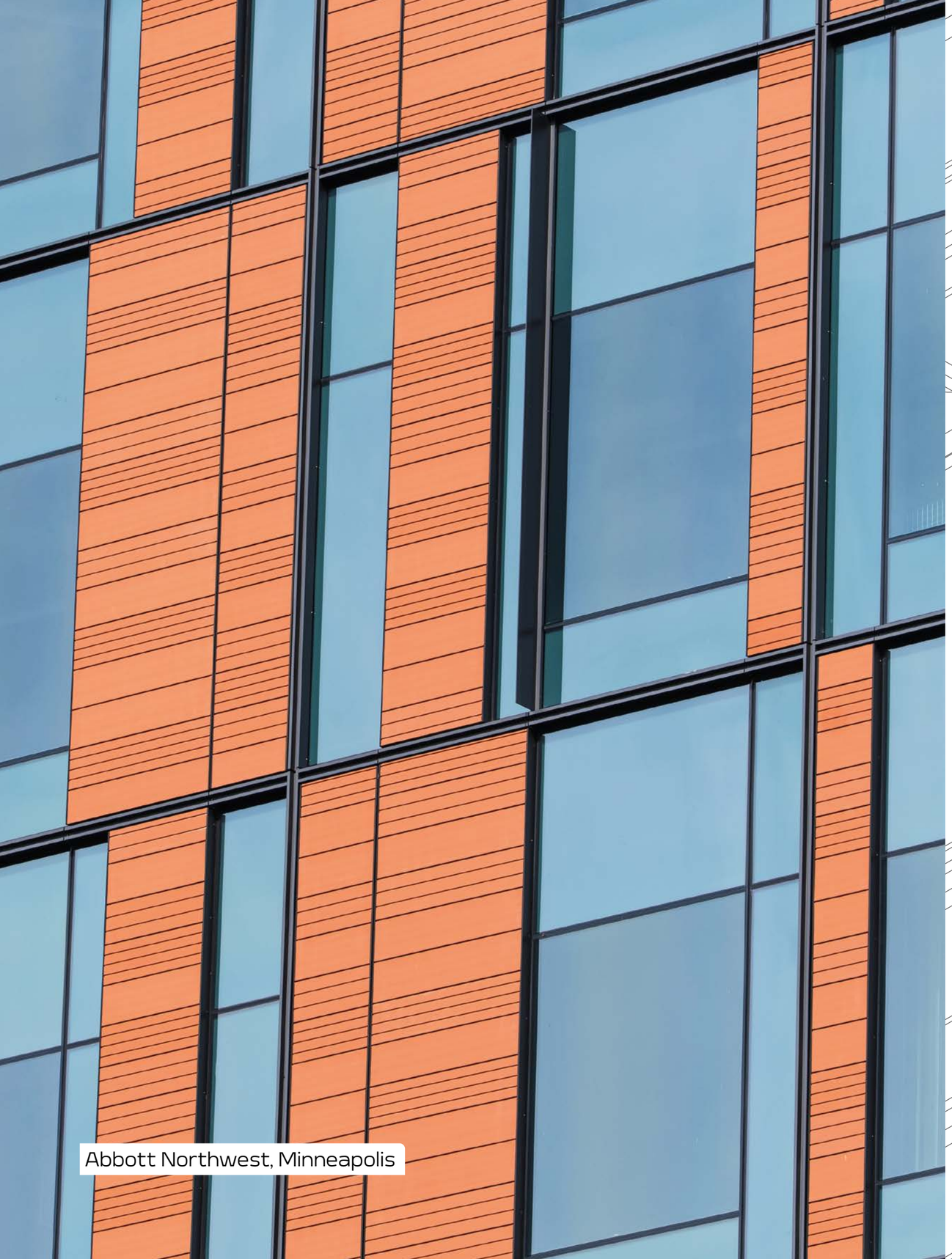

Abbott Northwest, Minneapolis

WALL BRACKETS

Q-VENT

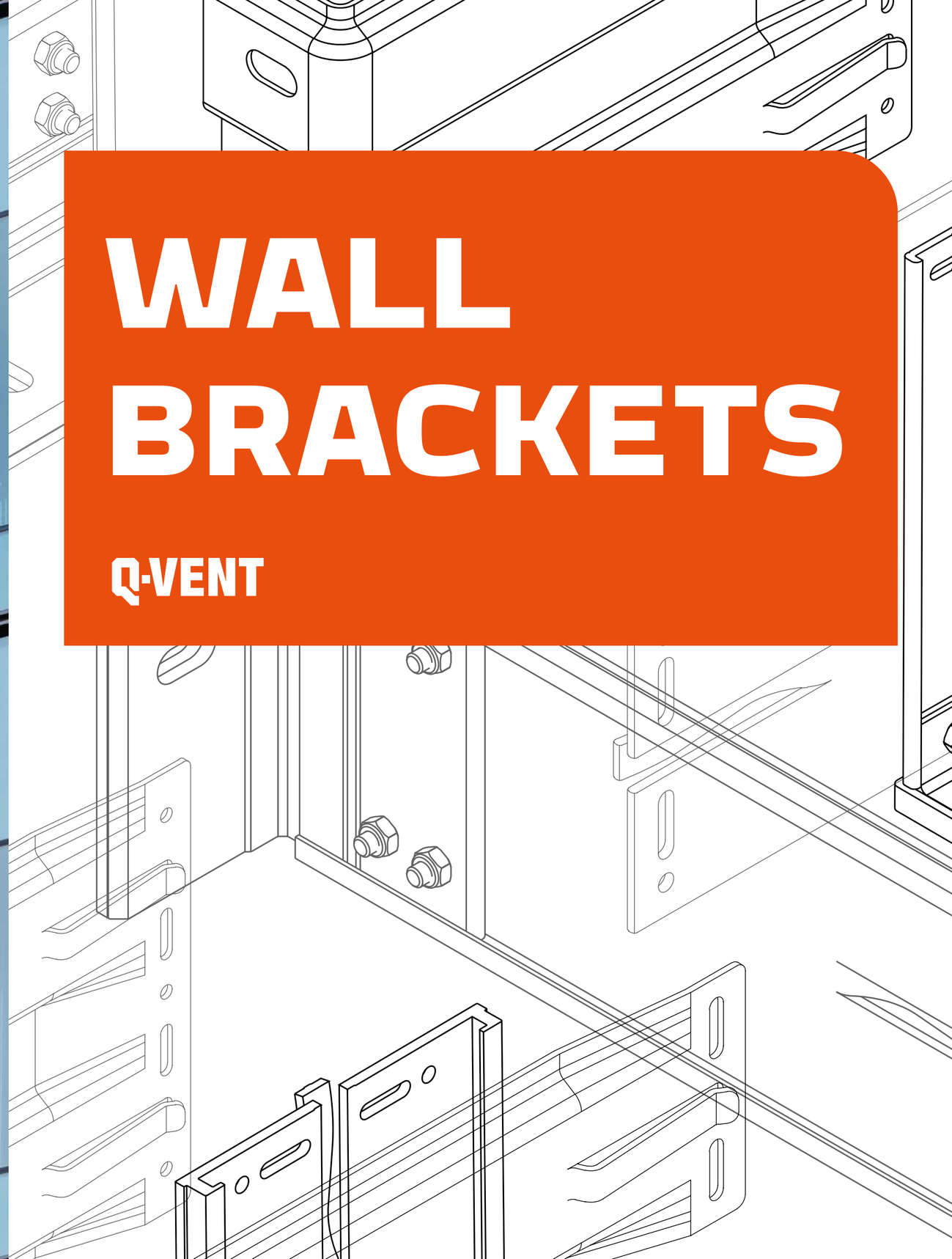

Double brackets

AW 6063 T6
Fixed / Sliding point

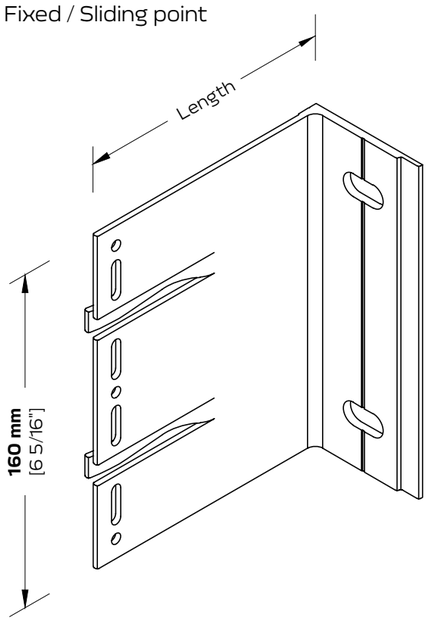

Options

Bracket-to-wall connection	Item No.
Holes for **M10 [3/8" dia.]** fastener as standard; suitable for concrete/ masonry wall	02.length.160.**10**
Holes for **M8 [5/16" dia.]** fastener; suitable for concrete/masonry walls	02.length.160.**8**
Holes for **ø6.3 [1/4" dia.]** fastener; suitable for stud walls	02.length.160.**63**

For the profile-to-bracket connection use A2 (304) self-drilling screws ø4.8x19 mm [#10-16x3/4"], supplied by customer

Length		Item No.	Weight/pc		Package pcs
50 mm	[1 15/16"]	02.50.160.10	162 g	[0.364 lb]	100
75 mm	[2 15/16"]	02.75.160.10	210 g	[0.473 lb]	100
100 mm	[3 15/16"]	02.100.160.10	204 g	[0.462 lb]	100
125 mm	[4 15/16"]	02.125.160.10	242 g	[0.548 lb]	90
150 mm	[5 7/8"]	02.150.160.10	293 g	[0.663 lb]	70
180 mm	[7 1/16"]	02.180.160.10	343 g	[0.775 lb]	70
210 mm	[8 1/4"]	02.210.160.10	419 g	[0.944 lb]	50
240 mm	[9 7/16"]	02.240.160.10	487 g	[1.100 lb]	50

Bracket with Thermo-pad

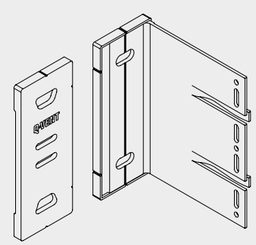

Brackets can be ordered with pre-installed thermo-pads
Material:
Polypropylene
Thickness:
5 mm [3/16"]
Item No:
02.lenght.160.fastener**T**
(e.g. 02.100.160.10T)

Mid brackets

AW 6063 T6
Fixed / Sliding point

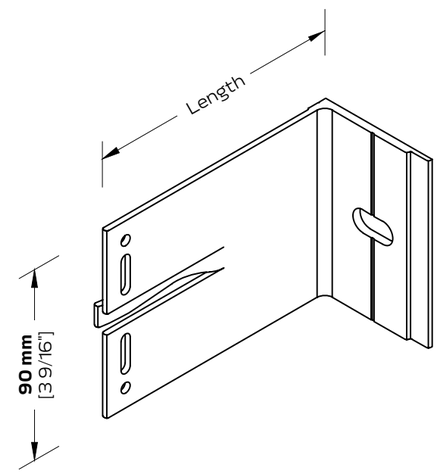

Options

Bracket-to-wall connection	Item No.
Holes for **M10 [3/8" dia.]** fastener as standard; suitable for concrete/ masonry wall	02.length.90.**10**
Hole for **M8 [5/16" dia.]** fastener; suitable for concrete/masonry walls	02.length.90.**8**
Holes for **ø6.3 [1/4" dia.]** fastener; suitable for stud walls	02.length.90.**63**

For the profile-to-bracket connection use A2 (304) self-drilling screws ø4.8x19 mm [#10-16x3/4"], supplied by customer

Length		Item No.	Weight/pc		Package pcs
50 mm	[1 15/16"]	02.50.90.10	91 g	[0.205 lb]	180
75 mm	[2 15/16"]	02.75.90.10	118 g	[0.266 lb]	150
100 mm	[3 15/16"]	02.100.90.10	115 g	[0.260 lb]	180
125 mm	[4 15/16"]	02.125.90.10	136 g	[0.308 lb]	170
150 mm	[5 7/8"]	02.150.90.10	165 g	[0.373 lb]	150
180 mm	[7 1/16"]	02.180.90.10	193 g	[0.436 lb]	100
210 mm	[8 1/4"]	02.210.90.10	236 g	[0.531 lb]	100
240 mm	[9 7/16"]	02.240.90.10	274 g	[0.619 lb]	100

Bracket with Thermo-pad

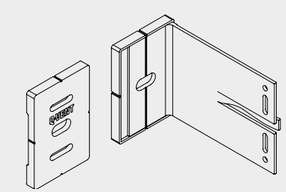

Brackets can be ordered with pre-installed thermo-pads
Material:
Polypropylene
Thickness:
5 mm [3/16"]
Item No:
02.lenght.90.fastener**T**
(e.g. 02.100.90.10T)

Single brackets

AW 6063 T6
Sliding point only

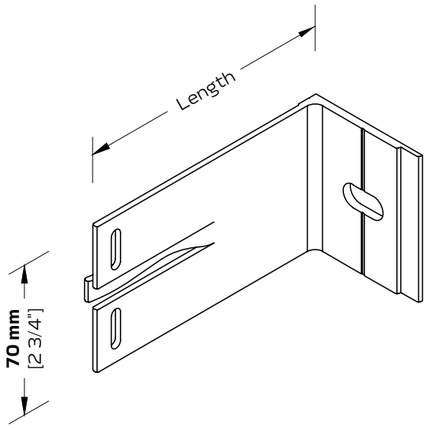

Options

Bracket-to-wall connection	Item No.
Holes for **M10 [3/8" dia.]** fastener as standard; suitable for concrete/ masonry wall	02.length.70.**10**
Hole for **M8 [5/16" dia.]** fastener; suitable for concrete/masonry walls	02.length.70.**8**
Holes for **ø6.3 [1/4" dia.]** fastener; suitable for stud walls	02.length.70.**63**

For the profile-to-bracket connection use A2 (304) self-drilling screws ø4.8x19 mm [#10-16x3/4"], supplied by customer

Length		Item No.	Weight/pc		Package pcs
50 mm	[1 15/16"]	02.50.70.10	71 g	[0.159 lb]	200
75 mm	[2 15/16"]	02.75.70.10	92 g	[0.207 lb]	200
100 mm	[3 15/16"]	02.100.70.10	89 g	[0.202 lb]	200
125 mm	[4 15/16"]	02.125.70.10	106 g	[0.240 lb]	180
150 mm	[5 7/8"]	02.150.70.10	128 g	[0.290 lb]	150
180 mm	[7 1/16"]	02.180.70.10	150 g	[0.339 lb]	140
210 mm	[8 1/4"]	02.210.70.10	183 g	[0.413 lb]	100
240 mm	[9 7/16"]	02.240.70.10	213 g	[0.481 lb]	100

Bracket with Thermo-pad

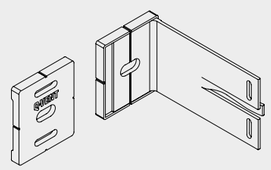

Brackets can be ordered with pre-installed thermo-pads

Material:
Polypropylene

Thickness:
5 mm [3/16"]

Item No:
02.lenght.70.fastener**T**
(e.g. 02.100.70.10T)

Thermo-pads

Material: Polypropylene

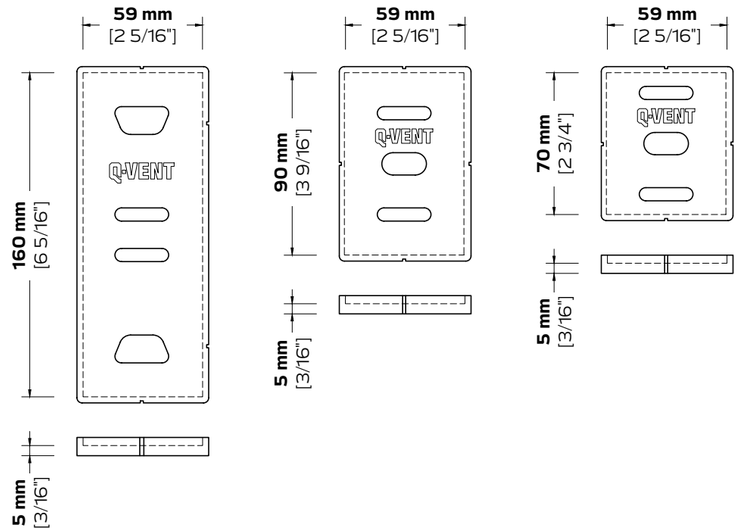

Length		Item No.	Weight/pc		Package pcs
160x59 mm	[6 5/16" x 2 5/16"]	05.59.160	26 g	[0.044 lb]	250
90x59 mm	[3 9/16" x 2 5/16"]	05.59.90	17 g	[0.037 lb]	400
70x59 mm	[2 3/4" x 2 5/16"]	05.59.70	13 g	[0.029 lb]	500

Range of adjustments

QVB 50

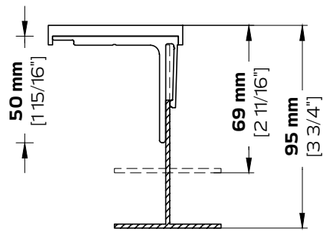

QVB 75

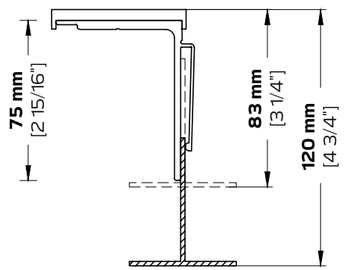

QVB 150

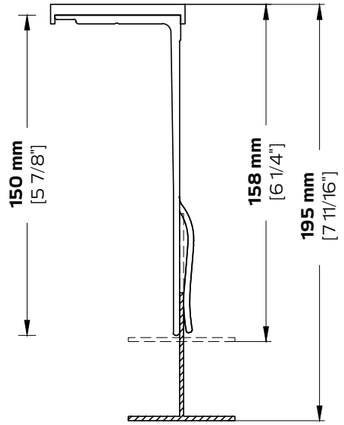

QVB 180

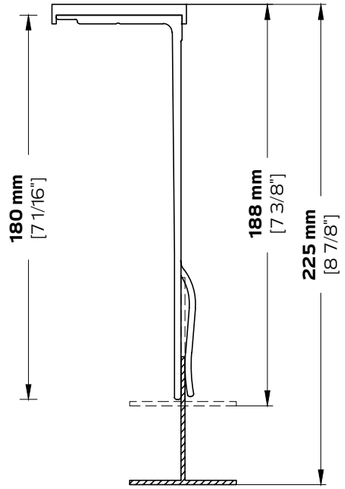

A minimum 20 mm overlap between the bracket and the profile is required

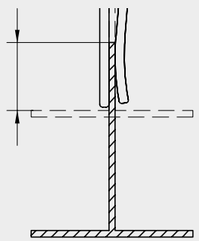

All adjustment dimensions are based on a 60 mm deep vertical profile and include 5 mm thermo-pad.

A minimum depth of 57 mm can be achieved with 45 mm deep vertical profile and QVB 50 bracket.

QVB 100

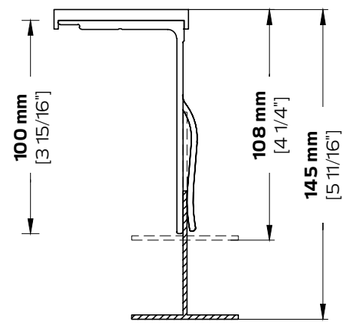

QVB 125

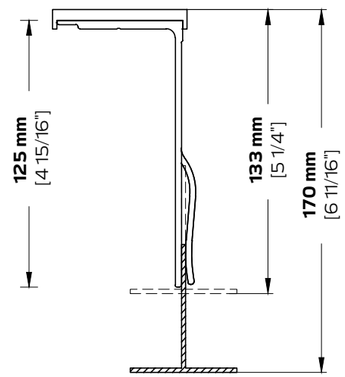

QVB 210

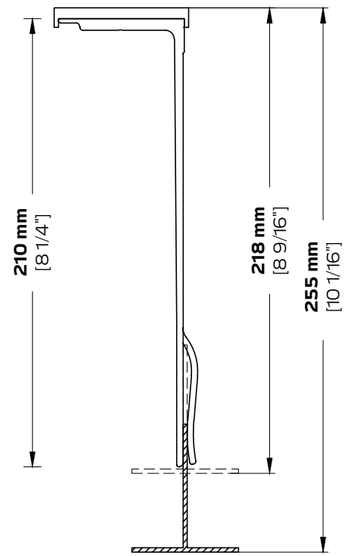

QVB 240

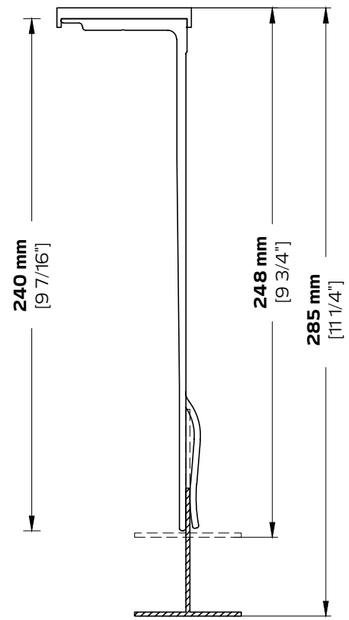

Bi-part T brackets

AW 6063 T66 (base) / T6 (extension)
Fixed / Sliding point

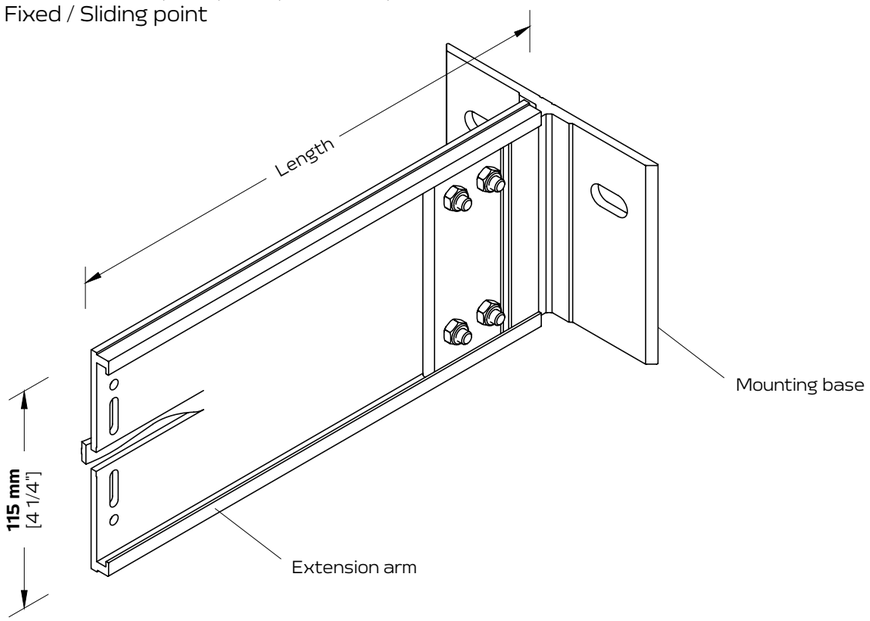

The length of the bracket can range from 235 mm [9 1/4"] to 485 mm [19"], in 1 mm [1/16"] increments

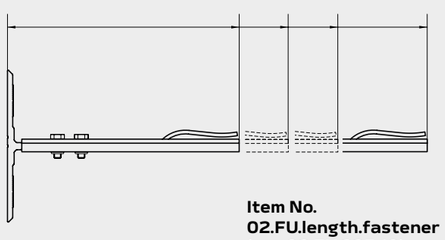

Item No.
02.FU.length.fastener
(e.g. 02.FU.235.10)

Options

Bracket-to-wall connection	Item No.
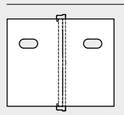 Holes for **M10 [3/8" dia.]** fastener as standard; suitable for concrete/ masonry wall	02.FU.length.**10**
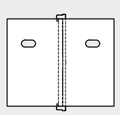 Holes for **M8 [5/16" dia.]** fastener; suitable for concrete/masonry walls	02.FU.length.**8**
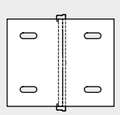 Holes for **ø6.3 [1/4" dia.]** fastener; suitable for stud walls	02.FU.length.**63**

For the profile-to-bracket connection use A2 (304) self-drilling screws ø4.8x19 mm [#10-16x3/4"], supplied by customer

Q-VENT | Bi-BRACKETS

Bi-part L brackets

AW 6063 T66 (base) / T6 (extension)
Sliding point only

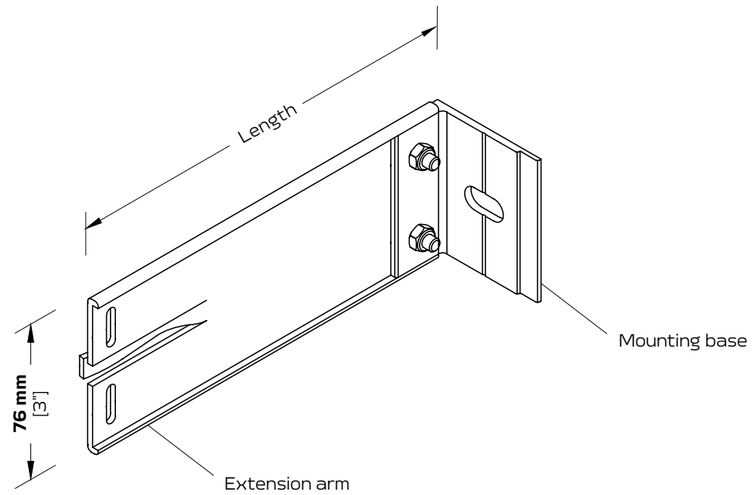

The length of the bracket can range from 235 mm [9 1/4"] to 485 mm [19"], in 1 mm [1/16"] increments

Item No.
02.FL.length.fastener
(e.g 02.FL.235.10)

Options

Bracket-to-wall connection	Item No.
Holes for **M10 [3/8" dia.]** fastener as standard; suitable for concrete/ masonry wall	02.FL.length.**10**
Hole for **M8 [5/16" dia.]** fastener; suitable for concrete/masonry walls	02.FL.length.**8**
Holes for **ø6.3 [1/4" dia.]** fastener; suitable for stud walls	02.FL.length.**63**

For the profile-to-bracket connection use A2 (304) self-drilling screws ø4.8x19 mm [#10-16x3/4"], supplied by customer

LUHA FAÇADE SOLUTIONS

Thermo-pads

Material: Polypropylene

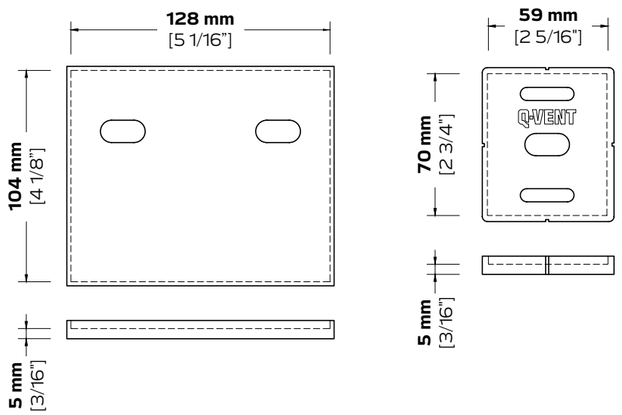

Length		Item No.	Weight/pc		Package pcs
104x128 mm	[4 1/8" x 5 1/16"]	05.104.128	30 g	[0.066 lb]	200
70x59 mm	[2 3/4" x 2 5/16"]	05.59.70	13 g	[0.029 lb]	500

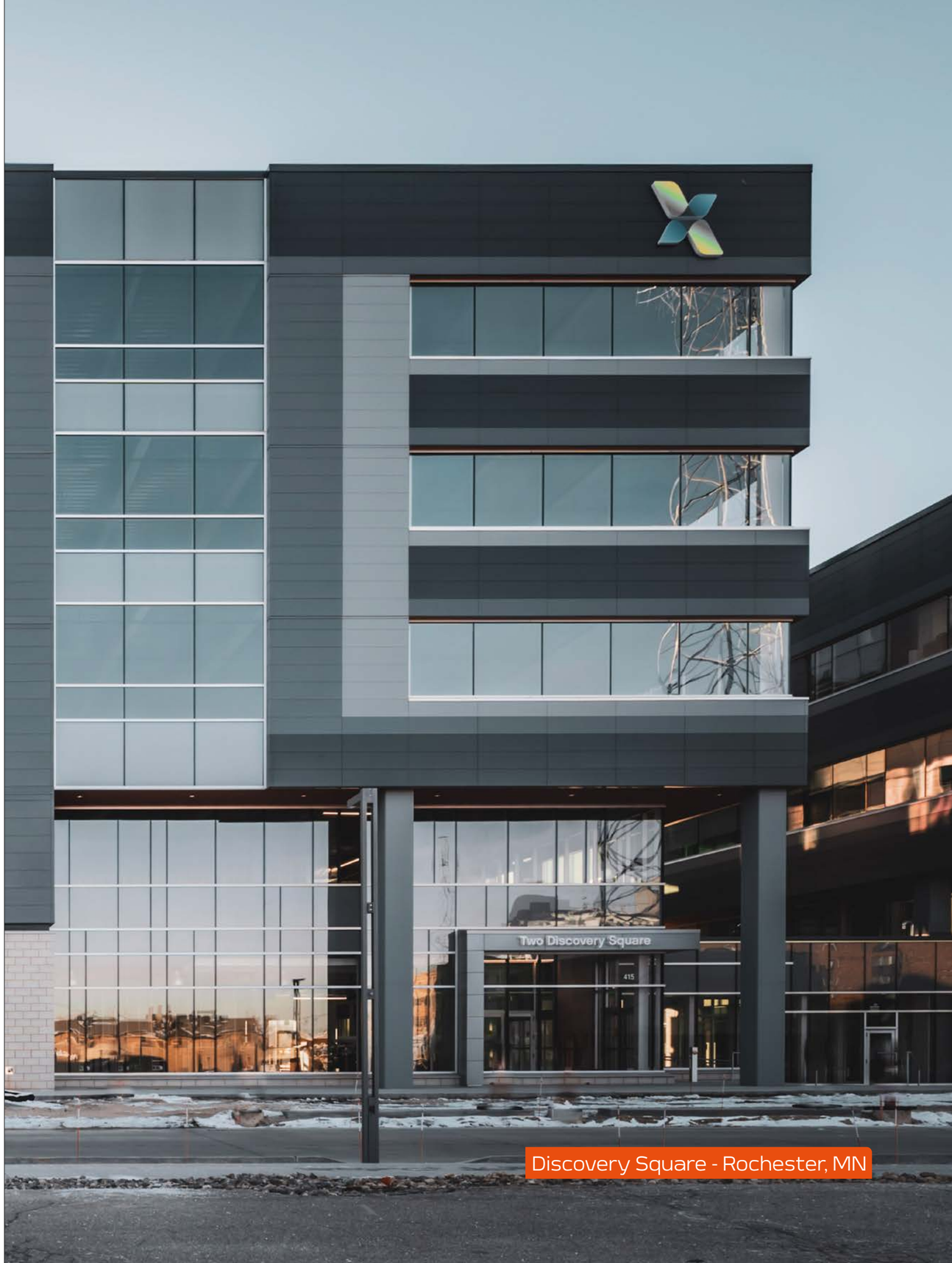

Discovery Square - Rochester, MN

Double brackets

Stainless steel 1.4404 (AISI 316L)
Fixed / Sliding point

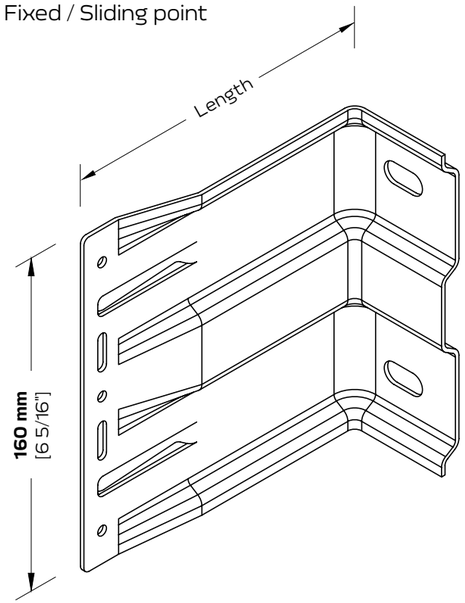

Options

Bracket-to-wall connection	Item No.
Holes for **M10 [3/8" dia.]** fastener as standard; suitable for concrete/ masonry wall	02.44.length.160.**10**
Holes for **ø6.3 [1/4" dia.]** fastener; suitable for stud walls	02.44.length.160.**63**

For the profile-to-bracket connection use A2 (304) self-drilling screws ø4.8x19 mm [#10-16x3/4"], supplied by customer

Length		Item No.	Weight/pc		Package pcs
80 mm	[3 1/8"]	02.44.80.160.10	346 g	[0.763 lb]	60
100 mm	[3 15/16"]	02.44.100.160.10	402 g	[0.886 lb]	50
125 mm	[4 15/16"]	02.44.125.160.10	471 g	[1.039 lb]	50
150 mm	[5 7/8"]	02.44.150.160.10	541 g	[1.193 lb]	40
175 mm	[6 7/8"]	02.44.175.160.10	610 g	[1.345 lb]	40
200 mm	[7 7/8"]	02.44.200.160.10	680 g	[1.499 lb]	30
225 mm	[8 7/8"]	02.44.225.160.10	750 g	[1.654 lb]	30
250 mm	[9 13/16"]	02.44.250.160.10	819 g	[1.806 lb]	30
275 mm	[10 13/16"]	02.44.275.160.10	889 g	[1.960 lb]	20
300 mm	[11 13/16"]	02.44.300.160.10	958 g	[2.112 lb]	20

Bimetallic corrosion between the stainless steel and aluminum

Protection is not required if:

- the atmospheric environment has low to medium corrosivity
- the system is properly installed, drained, and well-ventilated and the metals are not exposed to long-term moisture.

In environments with high or extreme corrosivity, it is recommended to use suitable corrosion protection (insulation tape or coating) between the stainless steel and aluminum.

Single brackets

Stainless steel 1.4404 (AISI 316L)
Sliding point only

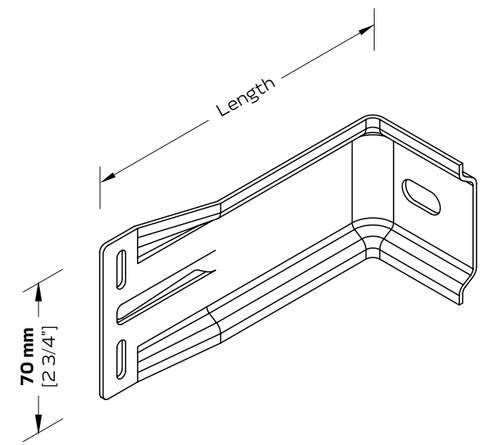

Options

Bracket-to-wall connection	Item No.
Holes for **M10 [3/8" dia.]** fastener as standard; suitable for concrete/ masonry wall	02.44.length.70.**10**
Holes for **ø6.3 [1/4" dia.]** fastener; suitable for stud walls	02.44.length.70.**63**

For the profile-to-bracket connection use A2 (304) self-drilling screws ø4.8x19 mm [#10-16x3/4"], supplied by customer

Length		Item No.	Weight/pc		Package pcs
80 mm	[3 1/8"]	02.44.80.70.10	154 g	[0.340 lb]	125
100 mm	[3 15/16"]	02.44.100.70.10	178 g	[0.392 lb]	110
125 mm	[4 15/16"]	02.44.125.70.10	209 g	[0.461 lb]	110
150 mm	[5 7/8"]	02.44.150.70.10	240 g	[0.529 lb]	80
175 mm	[6 7/8"]	02.44.175.70.10	271 g	[0.598 lb]	80
200 mm	[7 7/8"]	02.44.200.70.10	302 g	[0.666 lb]	60
225 mm	[8 7/8"]	02.44.225.70.10	332 g	[0.732 lb]	60
250 mm	[9 13/16"]	02.44.250.70.10	363 g	[0.800 lb]	50
275 mm	[10 13/16"]	02.44.275.70.10	394 g	[0.869 lb]	50
300 mm	[11 13/16"]	02.44.300.70.10	425 g	[0.937 lb]	50

Range of adjustments

QTB 80

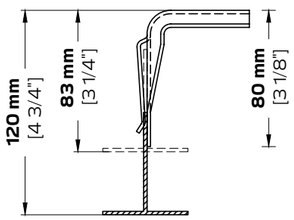

QTB 100

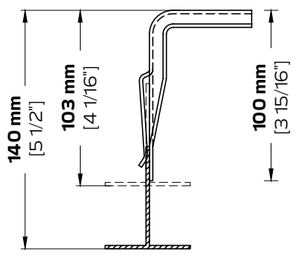

QTB 125

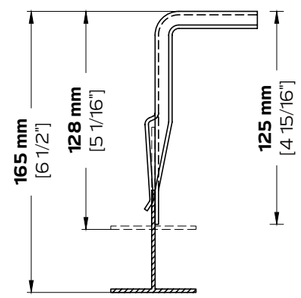

QTB 150

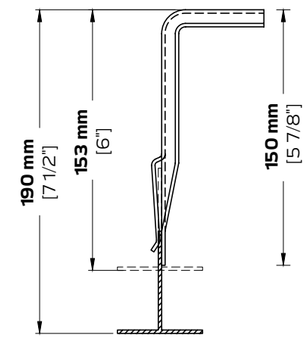

QTB 175

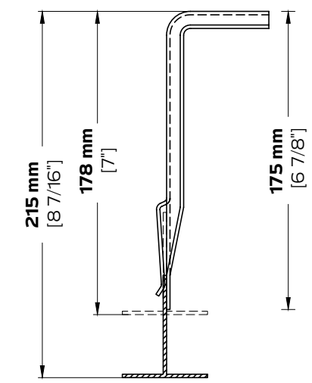

QTB 200

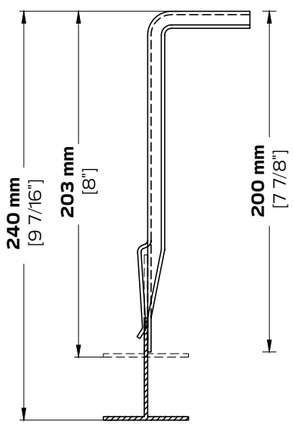

QTB 225

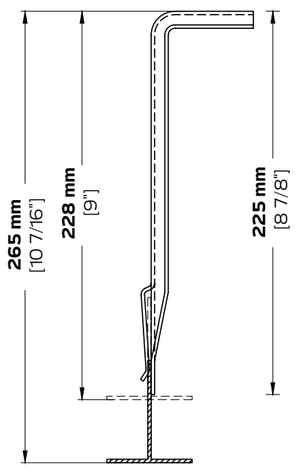

QTB 250

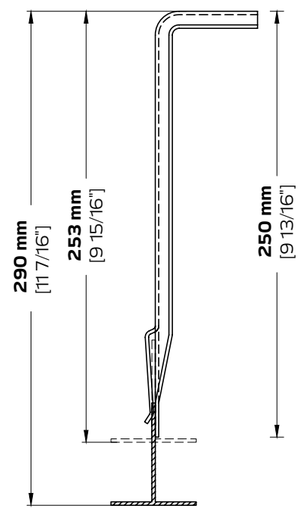

QTB 275

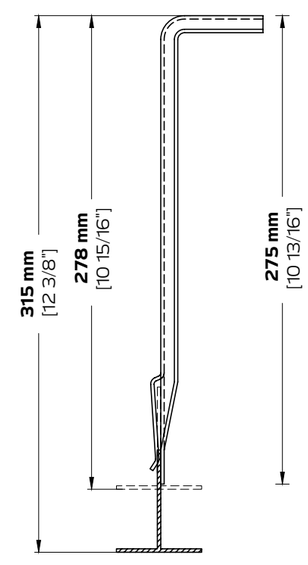

QTB 300

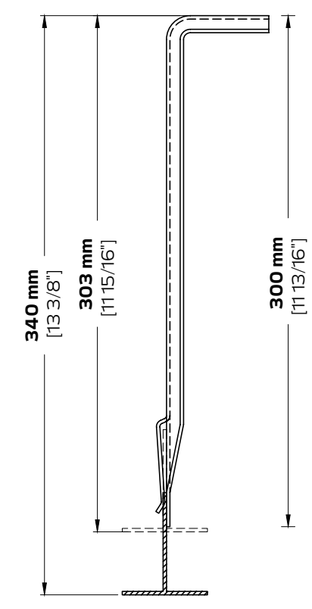

A minimum 20 mm overlap between the bracket and the profile is required

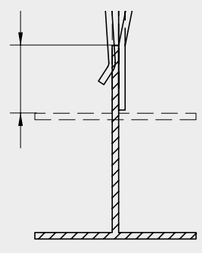

All adjustment dimensions are based on a 60 mm [2 3/8"] deep vertical profile

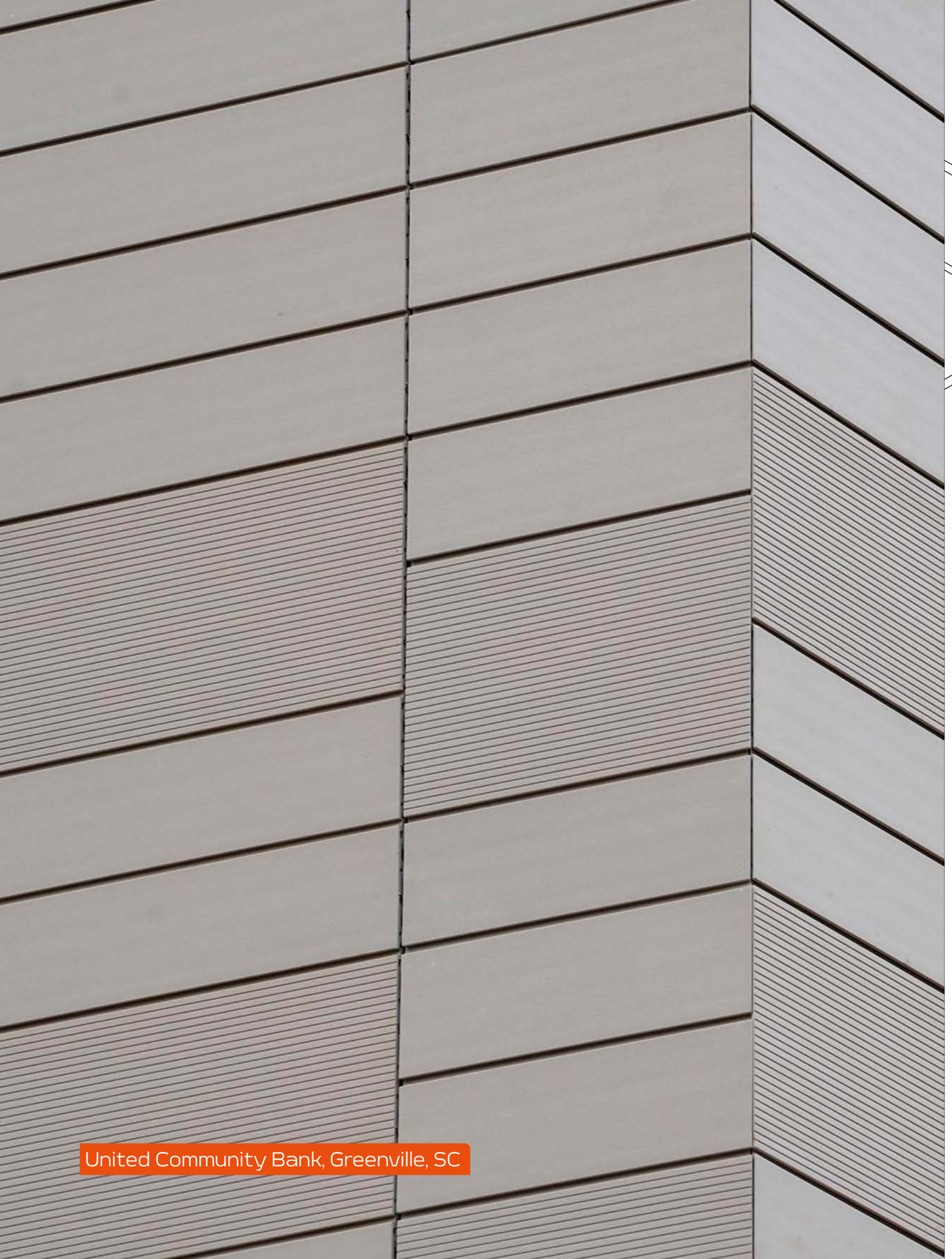

United Community Bank, Greenville, SC

STANDARD PROFILES

Q-VENT

AW 6063 T66
Unpainted and 6000 mm long as standard

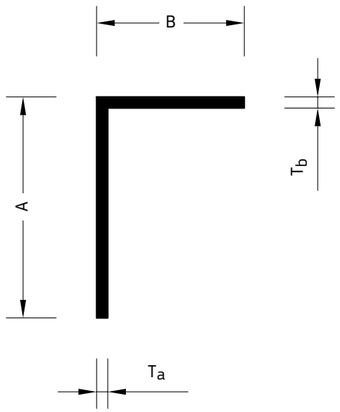

Options	
Finish	Item No.
Unpainted or mf as standard	01.1.dimensions.length
Powder-coated in RAL 7021, Class 1 Qualicoat	01.1.dimensions.length**P**
Anodized E6/C35 (black) 12 µm	01.1.dimensions.length**E**

Special RAL colours and other Qualicoat classes, as well as anodized finishes, on request

Dimensions A x B x T_a x T_b	Item No.	Weight	
150 x 70 x 6 x 6 mm [5.906" x 2.756" x 0.236" x 0.236"]	01.1.150706.6000	3 467 g/m	[2.392 lb/ft]
100 x 50 x 3 x 3 mm [3.937" x 1.969" x 0.118" x 0.118"]	01.1.100503.6000	1 191 g/m	[0.820 lb/ft]
80 x 40 x 4 x 4 mm [3.150" x 1.575" x 0.157" x 0.157"]	01.1.80404.6000	1245 g/m	[0.837 lb/ft]
80 x 25 x 3 x 3 mm [3.150" x 0.984" x 0.118" x 0.118"]	01.1.80253.6000	826 g/m	[0.569 lb/ft]
60 x 60 x 4 x 4 mm [2.362" x 2.362" x 0.157" x 0.157"]	01.1.60604.6000	1 257 g/m	[0.845 lb/ft]
60 x 60 x 3 x 3 mm [2.362" x 2.362" x 0.118" x 0.118"]	01.1.60603.6000	951 g/m	[0.639 lb/ft]
60 x 40 x 2 x 2 mm [2.362" x 1.575" x 0.079" x 0.079"]	01.1.60402.6000	529 g/m	[0.364 lb/ft]
60 x 40 x 1.4 x 1.4 mm [2.362" x 1.575" x 0.055" x 0.118"]	01.1.604014.6000	455 g/m	[0.313 lb/ft]
60 x 30 x 2 x 2 mm [2.362" x 1.181" x 0.079" x 0.079"]	01.1.60302.6000	457 g/m	[0.327 lb/ft]

Dimensions A x B x T_a x T_b	Item No.	Weight	
60 x 25 x 3 x 3 mm [2.362" x 0.984" x 0.118" x 0.118"]	01.1.60253.6000	662 g/m	[0.458 lb/ft]
42 x 25 x 3 x 3 mm [1.654" x 0.945" x 0.118" x 0.118"]	01.1.42253.6000	517 g/m	[0.357 lb/ft]
40 x 40 x 3 x 3 mm [1.575" x 1.575" x 0.118" x 0.118"]	01.1.40403.6000	626 g/m	[0.421 lb/ft]
40 x 40 x 2 x 2 mm [1.575" x 1.575" x 0.079" x 0.079"]	01.1.40402.6000	421 g/m	[0.290 lb/ft]
40 x 20 x 2 x 2 mm [1.575" x 0.787" x 0.079" x 0.079"]	01.1.40202.6000	315 g/m	[0.217 lb/ft]

AW 6063 T66
Unpainted and 6000 mm long as standard

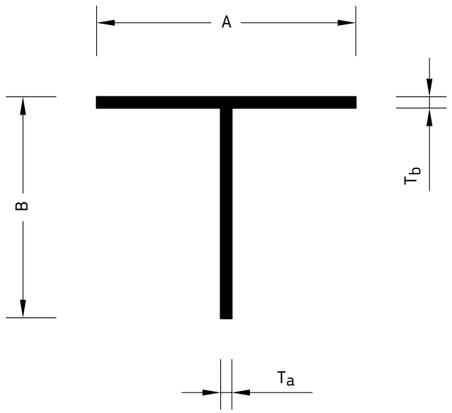

Options	
Finish	Item No.
Unpainted or mf as standard	01.2.dimensions.length
Powder-coated in RAL 7021, Class 1 Qualicoat	01.2.dimensions.length**P**
Anodized E6/C35 (black) 12 µm	01.2.dimensions.length**E**

Special RAL colours and other Qualicoat classes, as well as anodized finishes, on request

Dimensions A x B x T_a x T_b	Item No.	Weight	
100 x 160 x 6 x 6 mm [3.937" x 6.299" x 0.236" x 0.236"]	01.2.1001606.6000	4 096 g/m	[2.862 lb/ft]
100 x 85 x 5 x 5 mm [3.937" x 3.346" x 0.197" x 0.197"]	01.2.100855.6000	2 418 g/m	[1.625 lb/ft]
100 x 70 x 5 x 5 mm [3.937" x 2.756" x 0.197" x 0.197"]	01.2.100705.6000	2 224 g/m	[1.532 lb/ft]
110 x 60 x 2 x 2 mm [4.370" x 2.362" x 0.079" x 0.079"]	01.2.110602.6000	886 g/m	[0.610 lb/ft]
110 x 45 x 2 x 2 mm [4.331" x 1.772" x 0.079" x 0.079"]	01.2.110452.6000	826 g/m	[0.569 lb/ft]
80 x 60 x 3 x 3 mm [3.150" x 2.362" x 0.118" x 0.118"]	01.2.80603.6000	1 106 g/m	[0.762 lb/ft]
80 x 60 x 2 x 2 mm [3.150" x 2.362" x 0.079" x 0.079"]	01.2.80602.6000	734 g/m	[0.506 lb/ft]
80 x 45 x 2 x 2 mm [3.150" x 1.772" x 0.079" x 0.079"]	01.2.80452.6000	675 g/m	[0.457 lb/ft]
60 x 60 x 2 x 3 mm [2.362" x 2.362" x 0.079" x 0.118"]	01.2.602603.6000	790 g/m	[0.544 lb/ft]

Q-VENT | T STANDARD PROFILES

Dimensions A x B x T_a x T_b	Item No.	Weight	
60 x 60 x 2 x 2 mm [2.362" x 2.362" x 0.079" x 0.079"]	01.2.60602.6000	639 g/m	[0.442 lb/ft]
58 x 65 x 2.7 x 2.7 mm [2.283" x 2.559" x 0.106" x 0.106"]	01.2.586527.6000	811 g/m	[0.558 lb/ft]

Wayfair, Chicago, IL

QV1.2

EXPOSED MECHANICAL FASTENING FOR FLAT PANELS, HORIZONTAL FIXING

Q-VENT

Horizontal T brackets

AW 6063 T66

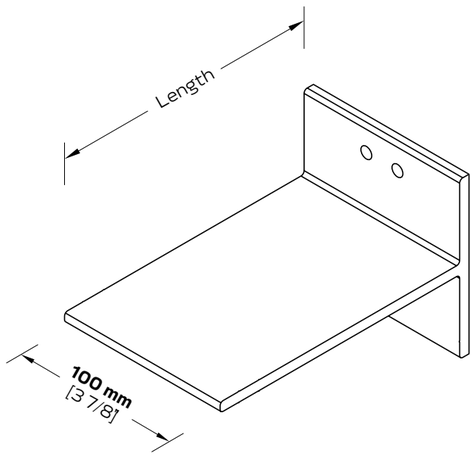

Options

Bracket-to-wall connection	Item No.
Holes for **ø6.3 [1/4" dia.]** fastener as standard; suitable for stud walls	02.2.length.100.**63**
Hole for **M10 [3/8" dia.]** fastener; suitable for concrete/masonry walls	02.2.length.100.**10**

Bracket with Thermo-pad

Material:
Polypropylene

Thickness:
5 mm [3/16"]

Item No:
05.60.100

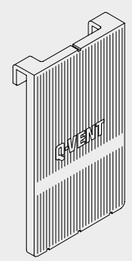

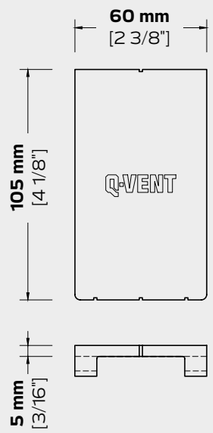

Length		Item No.	Weight/pc	
70 mm	[2 3/4"]	02.2.70.100.63	222 g	[0.503 lb]
85 mm	[3 7/8"]	02.2.85.100.63	242 g	[0.524 lb]
160 mm	[6 5/16"]	02.2.160.100.63	411 g	[0.929 lb]

Horizontal L brackets

AW 6063 T66

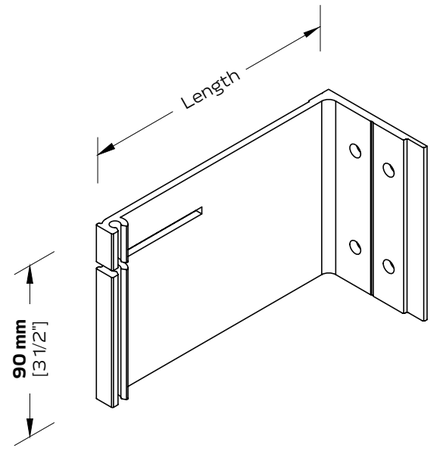

Options

Bracket-to-wall connection	Item No.
Holes for **ø6.3 [1/4" dia.]** fastener as standard; suitable for stud walls	02.3.length.90.**63**
Holes for **M10 [3/8" dia.]** fastener suitable for concrete/ masonry wall	02.3.length.90.**10**

For the profile-to-bracket connection use A2 (304) self-drilling screws ø4.8x32 mm [#10-16 x 1 1/2" HWH], supplied by customer

Bracket with Thermo-pad

Brackets can be ordered with pre-installed thermo-pads

Material:
Polypropylene

Thickness:
5 mm [3/16"]
Item No:
02.3.length.90.fastener.**T**
(e.g. 02.3.140.90.63**T**)

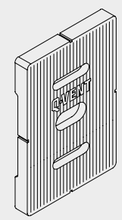

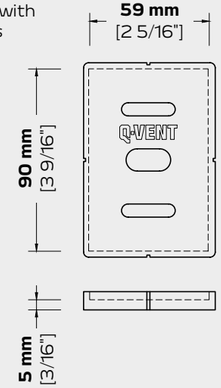

Length		Item No.	Weight/pc	
60 mm	[2 3/8"]	02.3.60.90.63	95 g	[0.215 lb]
90 mm	[3 9/16"]	02.3.90.90.63	125 g	[0.282 lb]
140 mm	[5 1/2"]	02.3.140.90.63	180 g	[0.407 lb]

Q-VENT | QV1.2 T PROFILES SUITABLE FOR HORIZONTAL FIXING

LUHA FAÇADE SOLUTIONS

AW 6063 T66
Unpainted, 6000 mm [20'] long,
and without slotted holes as standard

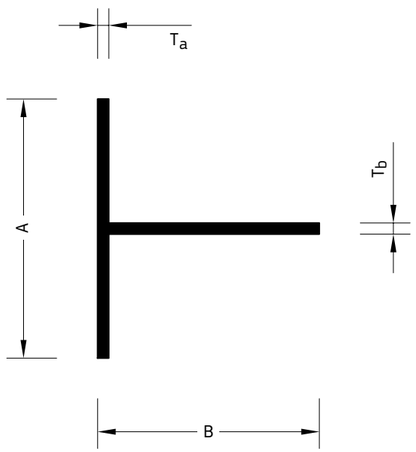

Options

Finish	Item No.
Unpainted or mf as standard	01.2.dimensions.length
Powder-coated in RAL 7021, Class 1 Qualicoat	01.2.dimensions.length**P**
Anodized E6/C35 (black) 12 µm	01.2.dimensions.length**E**

Special RAL colours and other Qualicoat classes, as well as anodized finishes, on request

Dimensions A x B x T_a x T_b	Item No.	Weight
100 x 70 x 5 x 5 mm [3.937" x 2.756" x 0.197" x 0.197"]	01.2.100705.6000	2 224 g/m [1.532 lb/ft]
100 x 85 x 5 x 5 mm [3.937" x 3.346" x 0.197" x 0.197"]	01.2.100855.6000	2 418 g/m [1.625 lb/ft]
100 x 160 x 6 x 6 mm [3.937" x 6.299" x 0.236" x 0.236"]	01.2.1001606.6000	4 096 g/m [2.862 lb/ft]

Q-VENT | QV1.2 L PROFILES SUITABLE FOR HORIZONTAL FIXING

LUHA FAÇADE SOLUTIONS

AW 6063 T66
Unpainted, 6000 mm [20'] long,
and without slotted holes as standard

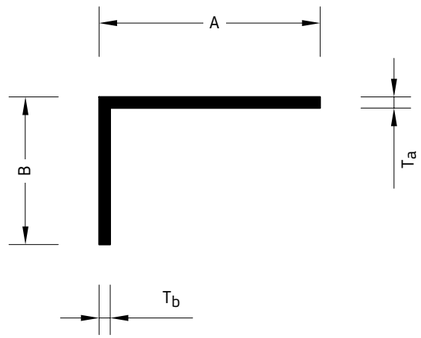

Options

Finish	Item No.
Unpainted or mf as standard	01.1.dimensions.length
Powder-coated in RAL 7021, Class 1 Qualicoat	01.1.dimensions.length**P**
Anodized E6/C35 (black) 12 µm	01.1.dimensions.length**E**

Profiles can be ordered with pre-fabricated slotted holes, upon request

Dimensions A x B x T_a x T_b	Item No.	Weight
42 x 25 x 3 x 3 mm [1.654" x 0.984" x 0.118" x 0.118"]	01.1.42253.6000	517 g/m [0.357 lb/ft]
60 x 25 x 3 x 3 mm [2.362" x 0.984" x 0.118" x 0.118"]	01.1.60253.6000	662 g/m [0.458 lb/ft]
80 x 25 x 3 x 3 mm [3.150" x 0.984" x 0.118" x 0.118"]	01.1.80253.6000	826 g/m [0.569 lb/ft]
80 x 40 x 4 x 4 mm [3.150" x 1.575" x 0.157" x 0.157"]	01.1.80404.6000	1 245 g/m [0.837 lb/ft]
100 x 50 x 3 x 3 mm [3.937" x 1.969" x 0.118" x 0.118"]	01.1.100503.6000	1 191 g/m [0.820 lb/ft]
150 x 70 x 6 x 6 mm [5.910" x 2.758" x 0.236" x 0.236"]	01.1.150706.6000	3 467 g/m [2.392 lb/ft]

AW 6063 T66
Unpainted, 6000 mm [20'] long,
and without slotted holes as standard

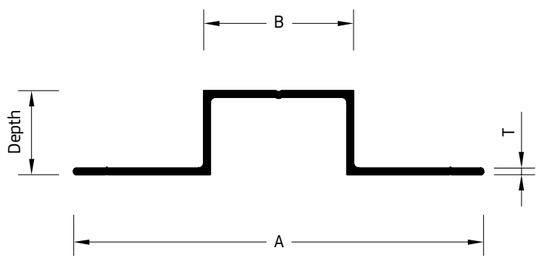

Options

Finish	Item No.
Unpainted or mf as standard	01.5.dimensions-1.length
Powder-coated in RAL 7021, Class 1 Qualicoat	01.5.dimensions-1.length**P**
Anodized E6/C35 (black) 12 µm	01.5.dimensions-1.length**E**

Profiles can be ordered with pre-fabricated slotted holes

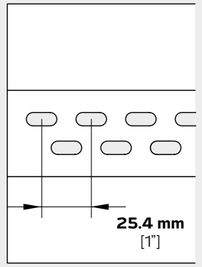

01.5.depth-1.**631**.length
(e.g. 01.5.25-1.631.6000)

Slotted holes for ø6.3 [1/4" dia.] fastener

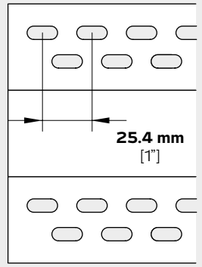

01.5.depth-1.**632**.length
(e.g. 01.5.25-1.632.6000)

Special RAL colours and other Qualicoat classes, as well as anodized finishes, on request

Dimensions D x A x B x T	Item No.	Weight	
16 x 124 x 41 x 2 mm [0.630" x 4.882" x 1.614" x 0.079"]	01.5.16-1.6000	824 g/m	[0.569 lb/ft]
20 x 120 x 70 x 3 mm [0.787" x 4.724" x 2.756" x 0.118"]	01.5.20-1.6000	1 243 g/m	[0.858 lb/ft]
20 x 120 x 60 x 2 mm [0.788" x 4.724" x 2.362" x 0.079"]	03.697.6000	829 g/m	[0.571 lb/ft]
25 x 124 x 41 x 2 mm [0.984" x 4.882" x 1.614" x 0.079"]	01.5.25-1.6000	926 g/m	[0.639 lb/ft]

Q-VENT | QV1.2 HAT PROFILES

Dimensions D x A x B x T	Item No.	Weight	
25 x 125 x 65 x 3 mm [0.984" x 4.921" x 2.559" x 0.118"]	01.5.25-2.6000	1 375 g/m	[0.947 lb/ft]
35 x 89 x 38 x 2 mm [1.378" x 3.504" x 1.496" x 0.079"]	01.5.35-1.6000	842 g/m	[0.581 lb/ft]
45 x 146 x 60 x 2.4 mm [1.772" x 5.748" x 2.362" x 0.094"]	01.5.45-1.6000	1 505 g/m	[1.037 lb/ft]
57 x 144 x 60 x 3 mm [2.244" x 5.669" x 2.362" x 0.118"]	01.5.57-1.6000	1 526 g/m	[1.051 lb/ft]
117 x 144 x 60 x 3 mm [4.606" x 5.669" x 2.362" x 0.118"]	01.5.117-1.6000	3 050 g/m	[2.101 lb/ft]
117 x 144 x 60 x 3 mm [4.606" x 5.669" x 2.362" x 0.118"]	01.5.117-2.6000	3 740 g/m	[2.649 lb/ft]

Q-VENT | QV1.2 J PROFILES

LUHA FAÇADE SOLUTIONS

AW 6063 T66
Unpainted, 6000 mm [20’] long,
and without slotted holes as standard

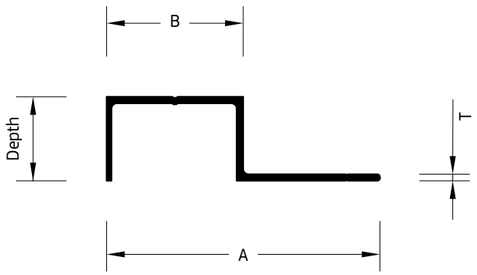

Options

Finish	Item No.
Unpainted or mf as standard	01.4.dimensions-1.length
Powder-coated in RAL 7021, Class 1 Qualicoat	01.4.dimensions-1.length**P**
Anodized E6/C35 (black) 12 µm	01.4.dimensions-1.length**E**
Profiles can be ordered with pre-fabricated slotted holes	01.4.dimensions-1.**631**.length (e.g. 01.4.25-1.631.6000)

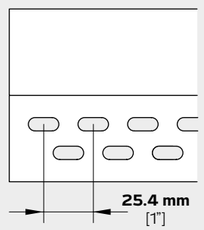

Slotted holes for ø6.3 [1/4” dia.] fastener

Special RAL colours and other Qualicoat classes, as well as anodized finishes, on request

Dimensions D x A x B x T	Item No.	Weight	
25 x 82 x 41 x 2 mm [0.984” x 3.228” x 1.614” x 0.079”]	01.4.25-1.6000	671 g/m	[0.461 lb/ft]

Q-VENT | QV1.2 Z PROFILES

LUHA FAÇADE SOLUTIONS

AW 6063 T66
Unpainted, 6000 mm [20’] long as standard

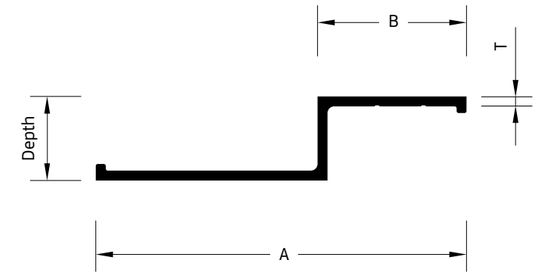

Options

Finish	Item No.
Unpainted or mf as standard	01.3.dimensions-1.length
Powder-coated in RAL 7021, Class 1 Qualicoat	01.3.dimensions-1.length**P**
Anodized E6/C35 (black) 12 µm	01.3.dimensions-1.length**E**

Special RAL colours and other Qualicoat classes, as well as anodized finishes, on request

Dimensions D x A x B x T	Item No.	Weight	
19 x 70 x 25 x 3 mm [0.748” x 2.756” x 0.984” x 0.118”]	01.3.19-1.6000	700 g/m	[0.482 lb/ft]
25 x 112 x 70 x 3 mm [0.984” x 4.409” x 2.756” x 0.118”]	01.3.25-1.6000	1 123 g/m	[0.774 lb/ft]
25 x 70 x 25 x 2 mm [0.984” x 2.756” x 0.984” x 0.079”]	01.3.25-2.6000	500 g/m	[0.344 lb/ft]
36 x 80 x 28 x 3 mm [1.417” x 3.150” x 1.102” x 0.118”]	01.3.36-1.6000	910 g/m	[0.626 lb/ft]
54 x 98 x 50 x 2 mm [2.126” x 3.858” x 1.969” x 0.079”]	01.3.54-1.6000	811 g/m	[0.558 lb/ft]
57 x 112 x 70 x 2.4 mm [2.244” x 4.409” x 2.756” x 0.094”]	01.3.57-1.6000	1 039 g/m	[0.715 lb/ft]
117 x 112 x 70 x 3 mm [4.606” x 4.409” x 2.756” x 0.118”]	01.3.117-1.6000	1 865 g/m	[1.285 lb/ft]

Q-VENT | QV1.2 H PROFILES

LUHA FAÇADE SOLUTIONS

AW 6063 T66
Unpainted, 6000 mm [20'] long,
and without slotted holes as standard

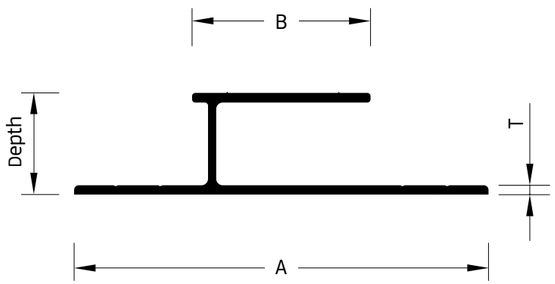

Options

Finish	Item No.
Unpainted or mf as standard	01.4.dimensions-1.length
Powder-coated in RAL 7021, Class 1 Qualicoat	01.4.dimensions-1.length**P**
Anodized E6/C35 (black) 12 µm	01.4.dimensions-1.length**E**

Special RAL colours and other Qualicoat classes, as well as anodized finishes, on request

Dimensions D x A x B x T	Item No.	Weight
32 x 130 x 56 x 3 mm [1.260" x 5.118" x 2.205" x 0.118"]	01.4.32-1.6000	1 682 g/m [1.159 lb/ft]
50 x 100 x 26 x 3.5 mm [1.969" x 3.937" x 1.024" x 0.138"]	01.4.50-1.6000	1 570 g/m [1.082 lb/ft]
117 x 130 x 56 x 3 mm [4.606" x 5.118" x 2.205" x 0.118"]	01.4.117-1.6000	2 476 g/m [1.705 lb/ft]

QV6

CONCEALED FASTENING USING UNDERCUT ANCHORS

Q-VENT

Horizontal rails

AW 6063 T66
Unpainted, 6000 mm [20'] long,
and without slotted holes as standard
Weight 643 g/m [0.443 lb/ft]

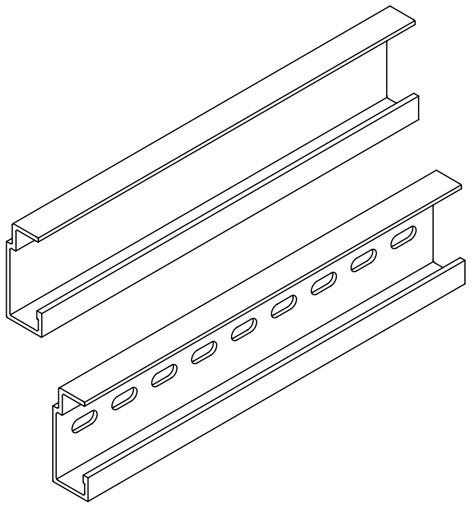

Options

Finish	Item No.
Unpainted and without slotted holes as standard	06.2.6000
Powder-coated in RAL 7021, Class 1 Qualicoat	06.2.6000**P**
Anodized E6/C35 (black) 12 µm	06.2.6000**E**
Rails can be ordered with pre-fabricated 7×16 mm [0.276"×0.63"] slotted holes	06.2.**631**.6000

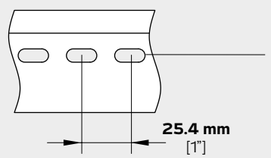

Special RAL colours and other Qualicoat classes, as well as anodized finishes, on request

For rail-to-vertcal profile connection use A2 (304) self-drilling screws, supplied by customer

Hangers

AW 6063 T66

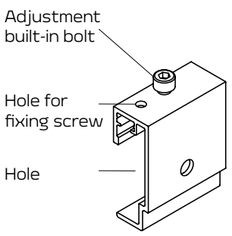

Adjustable hanger fixed
(dead load support)

The set includes:
- Built-in hex socket head cap bolt and nut, M6 A2 (304)
- Self-drilling screw Ø4.8 mm [#10] hex washer head A2 (304)

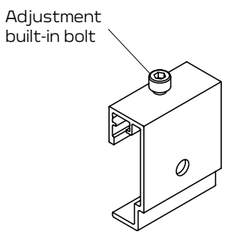

Adjustable hanger
(dead load support)

The set includes:
- Built-in hex socket head cap bolt and nut, M6 A2 (304)

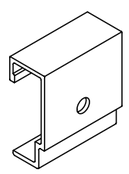

Hanger
(wind load support)

Silicon pad (if required)

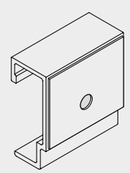

The silicon pad should be used to separate the hangers from cement-based panels and to ensure proper anchor setting.

Hanger options

Hole for **ø4.8 mm [#10]** fastener	Item No.	Weight/pc	Package/pcs
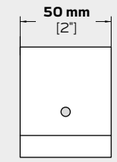 Adjustable hanger, fixed	06.201.5.50	39 g [0.088 lb]	300
Adjustable hanger	06.202.5.50	39 g [0.088 lb]	300
Hanger	06.203.5.50	32 g [0.073 lb]	500
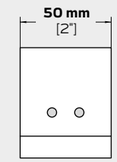 Adjustable hanger, fixed	06.201.52.50	39 g [0.088 lb]	300
Adjustable hanger	06.202.52.50	39 g [0.088 lb]	300
Hanger	06.203.52.50	32 g [0.073 lb]	500

Hole for **Fischer FZP M6**	Item No.	Weight/pc	Package/pcs
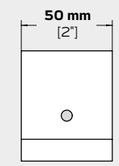 Adjustable hanger, fixed	06.201.6.50	39 g [0.088 lb]	300
Adjustable hanger	06.202.6.50	39 g [0.088 lb]	300
Hanger	06.203.6.50	32 g [0.073 lb]	500
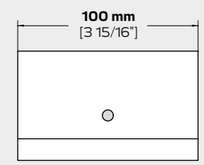 Adjustable hanger, fixed	06.201.6.100	78 g [0.175 lb]	150
Adjustable hanger	06.202.6.100	78 g [0.175 lb]	150
Hanger	06.203.6.100	64 g [0.145 lb]	200

Hole for **Fischer FZP M8**	Item No.	Weight/pc	Package/pcs
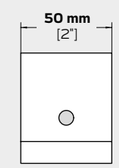 Adjustable hanger, fixed	06.201.8.50	39 g [0.088 lb]	300
Adjustable hanger	06.202.8.50	39 g [0.088 lb]	300
Hanger	06.203.8.50	32 g [0.073 lb]	500
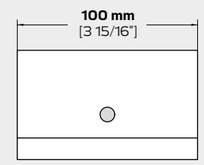 Adjustable hanger, fixed	06.201.8.100	78 g [0.175 lb]	150
Adjustable hanger	06.202.8.100	78 g [0.175 lb]	150
Hanger	06.203.8.100	64 g [0.145 lb]	200

Hanger options

Hole for **KEIL**		Item No.	Weight/pc	Package/pcs
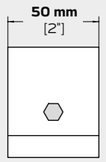	Adjustable hanger, fixed	06.201.9.50	39 g [0.088 lb]	300
	Adjustable hanger	06.202.9.50	39 g [0.088 lb]	300
	Basic hanger	06.203.9.50	32 g [0.073 lb]	500
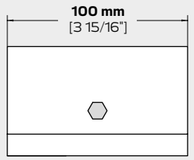	Adjustable hanger, fixed	06.201.9.100	78 g [0.175 lb]	150
	Adjustable hanger	06.202.9.100	78 g [0.175 lb]	150
	Basic hanger	06.203.9.100	64 g [0.145 lb]	200
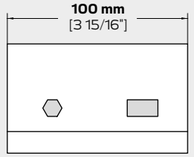	Adjustable hanger, fixed	06.201.92.100	78 g [0.175 lb]	150
	Adjustable hanger	06.202.92.100	78 g [0.175 lb]	150
	Basic hanger	06.203.92.100	64 g [0.145 lb]	200

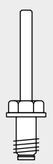

Hole for **ø6.5 mm / SFS TUF-S blind nut**		Item No.	Weight/pc	Package/pcs
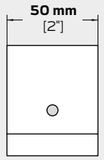	Adjustable hanger, fixed	06.201.65.50	39 g [0.088 lb]	300
	Adjustable hanger	06.202.65.50	39 g [0.088 lb]	300
	Basic hanger	06.203.65.50	32 g [0.073 lb]	500
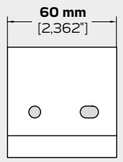	Adjustable hanger, fixed	06.201.652.60	47 g [0.105 lb]	250
	Adjustable hanger	06.202.652.60	47 g [0.105 lb]	250
	Basic hanger	06.203.652.60	39 g [0.088 lb]	400

Horizontal rails

AW 6063 T66
Unpainted, 6000 mm [20'] long,
and without slotted holes as standard
Weight 821 g/m [0.565 lb/ft]

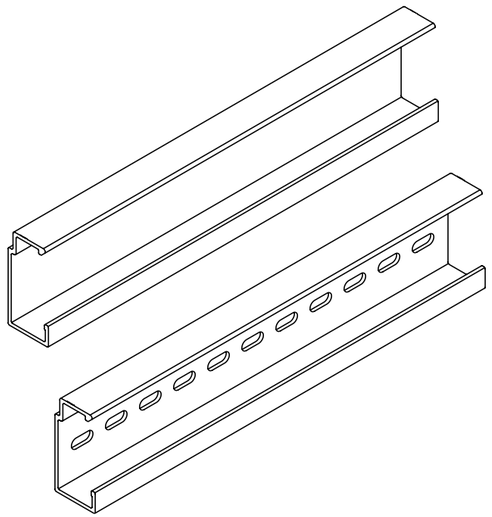

Options

Finish	Item No.
Unpainted and without slotted holes as standard	06.3.6000
Powder-coated in RAL 7021, Class 1 Qualicoat	06.3.6000**P**
Anodized E6/C35 (black) 12 µm	06.3.6000**E**
Rails can be ordered with pre-fabricated 7x16 mm slotted holes	06.3.**631**.6000

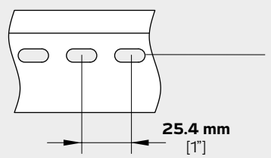

Special RAL colours and other Qualicoat classes, as well as anodized finishes, on request

For rail-to-vertcal profile connection use A2 (304) self-drilling screws, supplied by customer

Hangers

AW 6063 T66

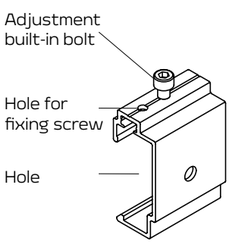

Adjustable hanger fixed
(dead load support)

The set includes:
- Built-in hex socket head cap bolt and nut, M6 A2 (304)
- Self-drilling screw Ø4.8 mm [#10] hex washer head A2 (304)

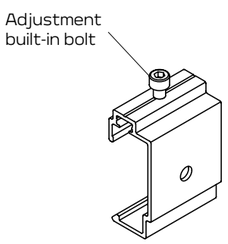

Adjustable hanger
(dead load support)

The set includes:
- Built-in hex socket head cap bolt and nut, M6 A2 (304)

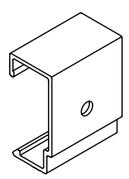

Hanger
(wind load support)

Silicon pad (if required)

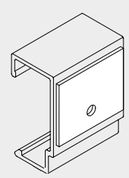

The silicon pad should be used to separate the hangers from cement-based panels and to ensure proper anchor setting.

Hanger options

Hole for **ø4.8 mm [#10]** fastener	Item No.	Weight/pc	Package/pcs
Adjustable hanger, fixed	06.301.5.50	47 g [0.105 lb]	250
Adjustable hanger	06.302.5.50	47 g [0.105 lb]	250
Hanger	06.303.5.50	41 g [0.093 lb]	420
Adjustable hanger, fixed	06.301.52.50	47 g [0.105 lb]	250
Adjustable hanger	06.302.52.50	47 g [0.105 lb]	250
Hanger	06.303.52.50	41 g [0.093 lb]	420

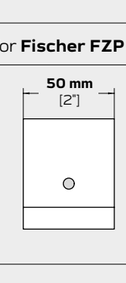

Hole for **Fischer FZP M6**	Item No.	Weight/pc	Package/pcs
Adjustable hanger, fixed	06.301.6.50	47 g [0.105 lb]	250
Adjustable hanger	06.302.6.50	47 g [0.105 lb]	250
Hanger	06.303.6.50	41 g [0.093 lb]	420
Adjustable hanger, fixed	06.301.6.100	93 g [0.211 lb]	120
Adjustable hanger	06.302.6.100	93 g [0.211 lb]	120
Hanger	06.303.6.100	82 g [0.185 lb]	160

Hole for **Fischer FZP M8**	Item No.	Weight/pc	Package/pcs
Adjustable hanger, fixed	06.301.8.50	47 g [0.105 lb]	250
Adjustable hanger	06.302.8.50	47 g [0.105 lb]	250
Hanger	06.303.8.50	41 g [0.093 lb]	420
Adjustable hanger, fixed	06.301.8.100	93 g [0.211 lb]	120
Adjustable hanger	06.302.8.100	93 g [0.211 lb]	120
Hanger	06.303.8.100	82 g [0.185 lb]	160

Hanger options

Hole for **KEIL**		Item No.	Weight/pc	Package/pcs
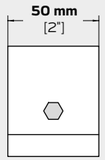	Adjustable hanger, fixed	06.301.9.50	47 g [0.105 lb]	250
	Adjustable hanger	06.302.9.50	47 g [0.105 lb]	250
	Basic hanger	06.303.9.50	41 g [0.093 lb]	420
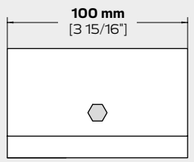	Adjustable hanger, fixed	06.301.9.100	93 g [0.211 lb]	120
	Adjustable hanger	06.302.9.100	93 g [0.211 lb]	120
	Basic hanger	06.303.9.100	82 g [0.185 lb]	160
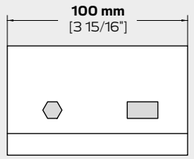	Adjustable hanger, fixed	06.301.92.100	93 g [0.211 lb]	120
	Adjustable hanger	06.302.92.100	93 g [0.211 lb]	120
	Basic hanger	06.303.92.100	82 g [0.185 lb]	160

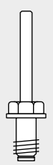

Hole for **ø6.5 mm / SFS TUF-S blind nut**		Item No.	Weight/pc	Package/pcs
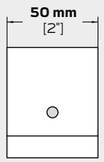	Adjustable hanger, fixed	06.301.65.50	47 g [0.105 lb]	250
	Adjustable hanger	06.302.65.50	47 g [0.105 lb]	250
	Basic hanger	06.303.65.50	41 g [0.093 lb]	400
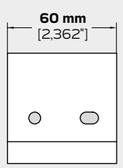	Adjustable hanger, fixed	06.301.652.60	56 g [0.126 lb]	200
	Adjustable hanger	06.302.652.60	56 g [0.126 lb]	200
	Basic hanger	06.303.652.60	49 g [0.111 lb]	320

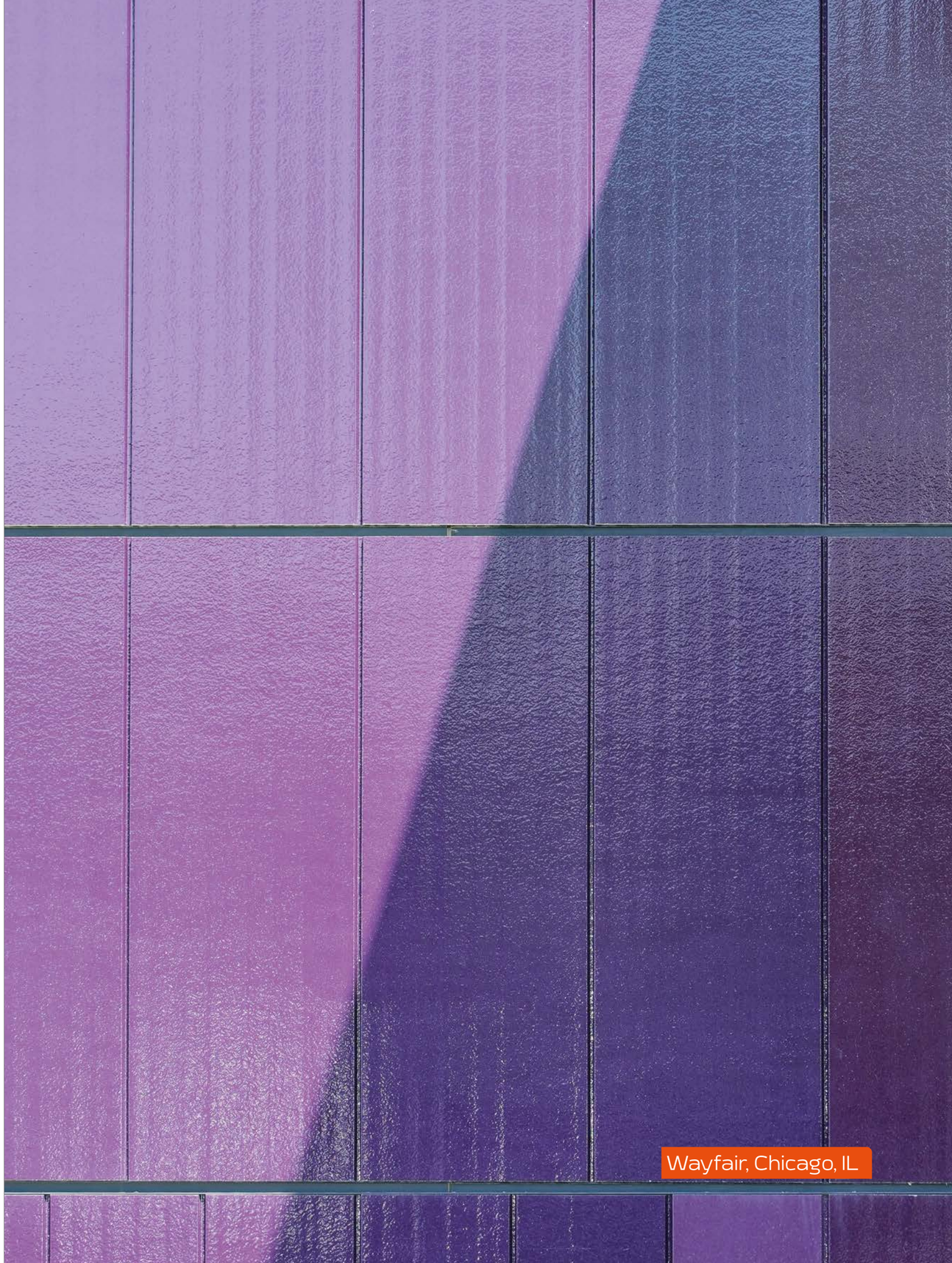

Wayfair, Chicago, IL

Horizontal rails

AW 6063 T66
Unpainted, 6000 mm [20'] long,
and without slotted holes as standard
Weight 1224 g/m [0.822 lb/ft]

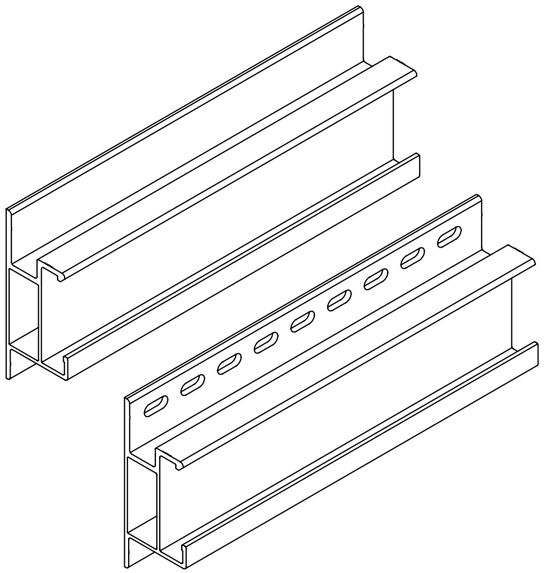

Options

Finish	Item No.
Unpainted and without slotted holes as standard	06.4.6000
Powder-coated in RAL 7021, Class 1 Qualicoat	06.4.6000**P**
Anodized E6/C35 (black) 12 µm	06.4.6000**E**
Rails can be ordered with pre-fabricated 7×16 mm [0.276"x0.63"] slotted holes	06.4.**631**.6000

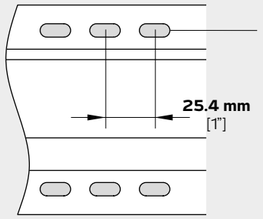

Special RAL colours and other Qualicoat classes, as well as anodized finishes, on request

For rail-to-vertcal profile connection use A2 (304) self-drilling screws, supplied by customer

Hangers

AW 6063 T66

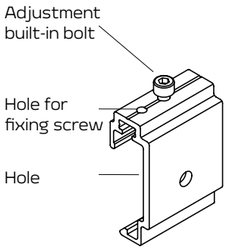

Adjustable hanger fixed
(dead load support)

The set includes:
- Built-in hex socket head cap bolt and nut, M6 A2 (304)
- Self-drilling screw Ø4.8 mm [#10] hex washer head A2 (304)

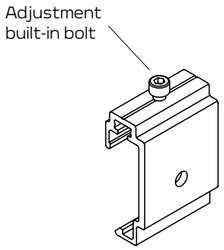

Adjustable hanger
(dead load support)

The set includes:
- Built-in hex socket head cap bolt and nut, M6 A2 (304)

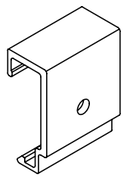

Hanger
(wind load support)

Silicon pad (if required)

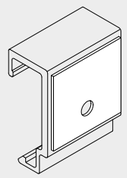

The silicon pad should be used to separate the hangers from cement-based panels and to ensure proper anchor setting.

Hanger options

Hole for **ø4.8 mm [#10]** fastener	Item No.	Weight/pc	Package/pcs
Adjustable hanger, fixed	06.401.5.50	61 g [0.138 lb]	120
Adjustable hanger	06.402.5.50	61 g [0.138 lb]	120
Hanger	06.403.5.50	54 g [0.122 lb]	300
Adjustable hanger, fixed	06.401.52.50	61 g [0.138 lb]	120
Adjustable hanger	06.402.52.50	61 g [0.138 lb]	120
Hanger	06.403.52.50	54 g [0.122 lb]	300

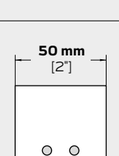

Hole for **Fischer FZP M6**	Item No.	Weight/pc	Package/pcs
Adjustable hanger, fixed	06.401.6.50	61 g [0.138 lb]	120
Adjustable hanger	06.402.6.50	61 g [0.138 lb]	120
Hanger	06.403.6.50	54 g [0.122 lb]	300
Adjustable hanger, fixed	06.401.6.100	122 g [0.277 lb]	60
Adjustable hanger	06.402.6.100	122 g [0.277 lb]	60
Hanger	06.403.6.100	108 g [0.244 lb]	120

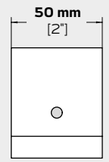

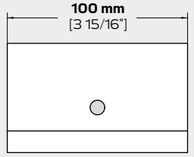

Hole for **Fischer FZP M8**	Item No.	Weight/pc	Package/pcs
Adjustable hanger, fixed	06.401.8.50	61 g [0.138 lb]	120
Adjustable hanger	06.402.8.50	61 g [0.138 lb]	120
Hanger	06.403.8.50	54 g [0.122 lb]	300
Adjustable hanger, fixed	06.401.8.100	122 g [0.277 lb]	60
Adjustable hanger	06.402.8.100	122 g [0.277 lb]	60
Hanger	06.403.8.100	108 g [0.244 lb]	120

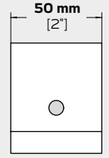

Hanger options

Hole for **KEIL**		Item No.	Weight/pc	Package/pcs
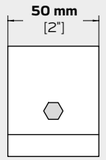	Adjustable hanger, fixed	06.401.9.50	61 g [0.138 lb]	120
	Adjustable hanger	06.402.9.50	61 g [0.138 lb]	120
	Basic hanger	06.403.9.50	54 g [0.122 lb]	300
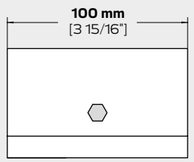	Adjustable hanger, fixed	06.401.9.100	122 g [0.277 lb]	60
	Adjustable hanger	06.402.9.100	122 g [0.277 lb]	60
	Basic hanger	06.403.9.100	108 g [0.244 lb]	120
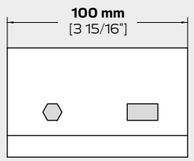	Adjustable hanger, fixed	06.401.92.100	122 g [0.277 lb]	60
	Adjustable hanger	06.402.92.100	122 g [0.277 lb]	60
	Basic hanger	06.403.92.100	108 g [0.244 lb]	120

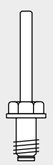

Hole for **ø6.5 mm / SFS TUF-S blind nut**		Item No.	Weight/pc	Package/pcs
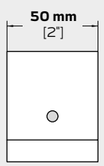	Adjustable hanger, fixed	06.401.65.50	61 g [0.138 lb]	120
	Adjustable hanger	06.402.65.50	61 g [0.138 lb]	120
	Basic hanger	06.403.65.50	54 g [0.122 lb]	300
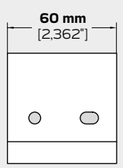	Adjustable hanger, fixed	06.401.652.60	73 g [0.166 lb]	120
	Adjustable hanger	06.402.652.60	73 g [0.166 lb]	120
	Basic hanger	06.403.652.60	65 g [0.147 lb]	300

QV7

MECHANICAL FASTENING FOR TERRACOTTA PANELS USING CLIPS

Q-VENT

Vertical profiles

AW 6063 T66
Painted, 6000 mm [20'] long

The profiles are powder-coated in RAL7021, Class 1 Qualicoat as standard
Special RAL colours and other Qualicoat classes, as well as anodized thicknesses and finishes, upon request

JOINT PROFILE

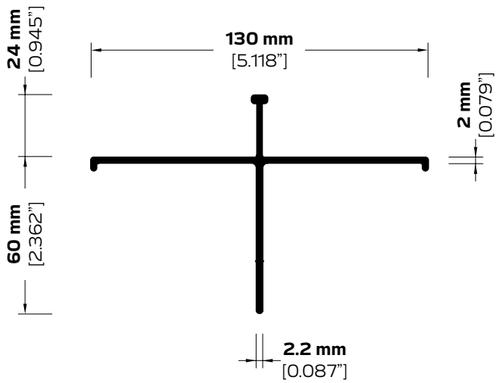

L PROFILE

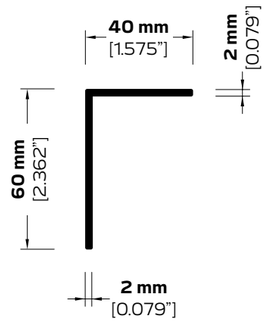

Profiles	Item No.			Weight	
	Unpainted or mf	Powder-coated RAL 7021 as standard	Anodized E6/C35 (black) 12 µm		
7.201 Joint profile 130x60	07.201.6000	07.201.6000P	07.201.6000E	1 230 g/m	[0.847 lb/ft]
Profile L 60x40x2	01.1.60402.6000	01.1.60402.6000P	01.1.60402.6000E	529 g/m	[0.364 lb/ft]

Vertical profiles

AW 6063 T66
Painted, 6000 mm [20'] long,
and without slotted holes as standard

The profiles are powder-coated in RAL7021, Class 1 Qualicoat as standard
Special RAL colours and other Qualicoat classes, as well as anodized thicknesses and finishes, upon request

For profile-to-verticals connection use A2 (304) self-drilling screw Ø6.3x25 mm [1/4"- 20 x 1"]

JOINT PROFILE

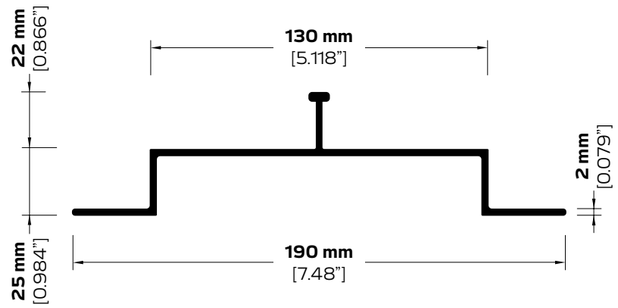

HAT PROFILE

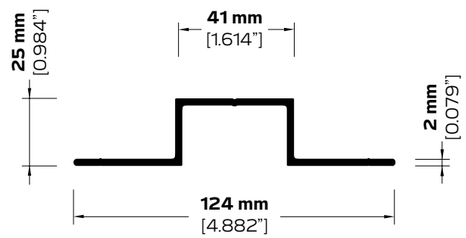

J PROFILE

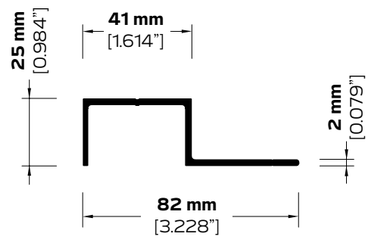

Profiles	Item No.			Weight	
	Unpainted or mf	Powder-coated RAL 7021 as standard	Anodized E6/C35 (black) 12 µm		
7.501 Joint profile 25x190/130	07.501.6000	07.501.6000P	07.501.6000E	1 431 g/m	[0.986 lb/ft]
Profile HAT 25x124/41	01.5.25-1.6000	01.5.25-1.6000P	01.5.25-1.6000E	926 g/m	[0.637 lb/ft]
Profile J 25x82/41	01.4.25-1.6000	01.4.25-1.6000P	01.4.25-1.6000E	671 g/m	[0.461 lb/ft]

Horizontal profiles

AW 6063 T66
Painted, 6000 mm [20'] long,
and without slotted holes as standard

The profiles are powder-coated in RAL7021, Class 1 Qualicoat as standard
Special RAL colours and other Qualicoat classes, as well as anodized thicknesses and finishes, upon request

For profile-to-verticals connection use A2 (304) self-drilling screw Ø6.3x25 mm [1/4"- 20 x 1"]

HAT PROFILE

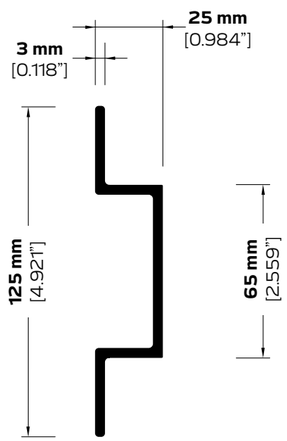

END PROFILE

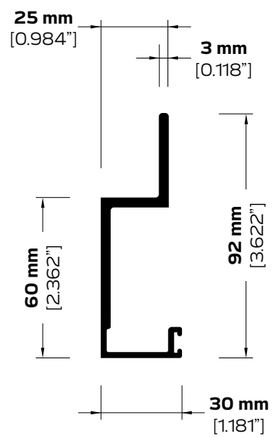

J PROFILE

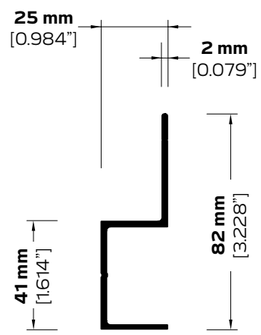

Profiles	Item No.			Weight	
	Unpainted or mf	Powder-coated RAL 7021 as standard	Anodized E6/C35 (black) 12 µm		
Profile HAT 25x125/65	01.5.25-2.6000	01.5.25-2.6000P	01.5.25-2.6000E	1 375 g/m	[0.947 lb/ft]
7.402 End profile 25x92/60	07.402.6000	07.402.6000P	07.402.6000E	1051 g/m	[0.724 lb/ft]
Profile J 25x82/41	01.4.25-1.6000	01.4.25-1.6000P	01.4.25-1.6000E	671 g/m	[0.461 lb/ft]

Horizontal profiles

AW 6063 T66
Painted, 6000 mm [20'] long,
and without slotted holes as standard

The profiles are powder-coated in RAL7021, Class 1 Qualicoat as standard
Special RAL colours and other Qualicoat classes, as well as anodized thicknesses and finishes, upon request

For profile-to-verticals connection use A2 (304) self-drilling screw Ø6.3x25 mm [1/4"- 20 x 1"]

JOINT PROFILE

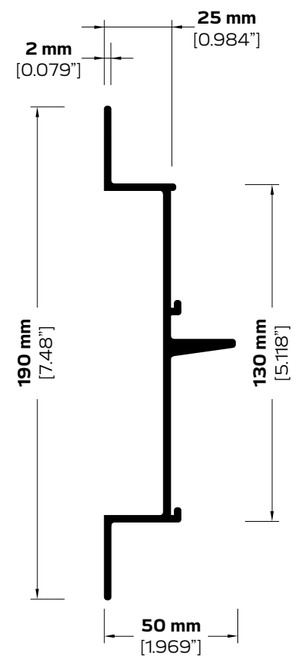

STARTER PROFILE

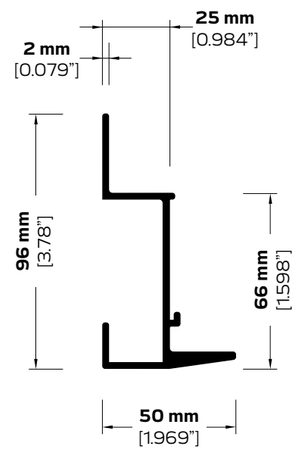

END PROFILE

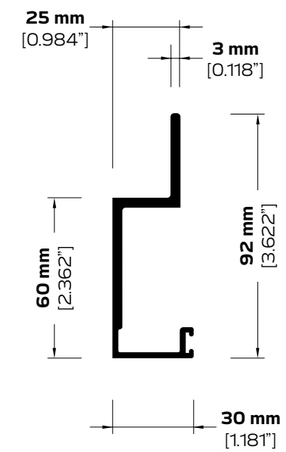

Profiles	Item No.			Weight	
	Unpainted or mf	Powder-coated RAL 7021 as standard	Anodized E6/C35 (black) 12 µm		
7.502 Joint profile 25x190/130	07.502.6000	07.502.6000P	07.502.6000E	1 719 g/m	[1.185 lb/ft]
7.401Starter profile 25x96/66	07.401.6000	07.401.6000P	07.401.6000E	1 217 g/m	[0.838 lb/ft]
7.402 End profile 25x92/60	07.402.6000	07.402.6000P	07.402.6000E	1051 g/m	[0.724 lb/ft]

Clips 27 mm

AW 6063 T66
Painted, holes for Ø6.3 mm [1/4” dia.], and includes gasket as standard

The clips are powder-coated in RAL 7021, Class 1 Qualicoat as standard. Special RAL colours and other Qualicoat classes, as well as anodized thicknesses and finishes, upon request

For the clip-to-profile connection use A2 (304) self-drilling screws ø6.3x25 mm [1/4 x 1 1/2” HWH]

Gasket material: TPV (EPDM+PP)

MID

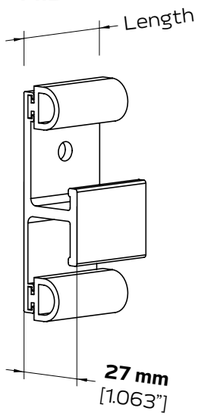

Length	Item No.	Weight/pc		Package box
20 mm [0.787”]	07.27-1.7.20P	22 g	[0.051 lb]	400
25 mm [0.984”]	07.27-1.7.25P	28 g	[0.064 lb]	400
35 mm [1.378”]	07.27-1.7.35P	39 g	[0.089 lb]	350

STARTER

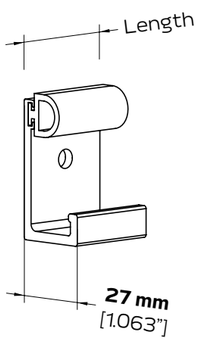

Length	Item No.	Weight/pc		Package box
20 mm [0.787”]	07.27-5s.7.20P	15 g	[0.035 lb]	400
25 mm [0.984”]	07.27-5s.7.25P	19 g	[0.043 lb]	400
35 mm [1.378”]	07.27-5s.7.35P	27 g	[0.061 lb]	350

END-3

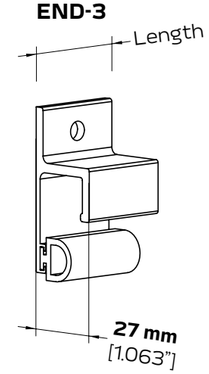

Length	Item No.	Weight/pc		Package box
20 mm [0.787”]	07.27-3.7.20P	17 g	[0.038 lb]	400
25 mm [0.984”]	07.27-3.7.25P	21 g	[0.047 lb]	400
35 mm [1.378”]	07.27-3.7.35P	29 g	[0.066 lb]	350

END-5E

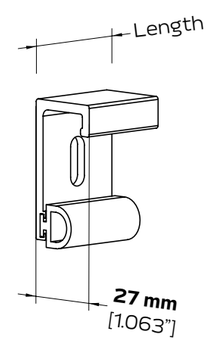

Length	Item No.	Weight/pc		Package box
20 mm [0.787”]	07.27-5E.619.20P	15 g	[0.035 lb]	400
25 mm [0.984”]	07.27-5E.619.25P	19 g	[0.043 lb]	400
35 mm [1.378”]	07.27-5E.619.35P	27 g	[0.061 lb]	350

END-6

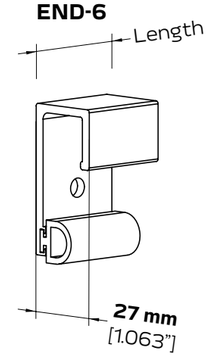

Length	Item No.	Weight/pc		Package box
20 mm [0.787”]	07.27-6.7.20P	18 g	[0.040 lb]	400
25 mm [0.984”]	07.27-6.7.25P	22 g	[0.050 lb]	400
35 mm [1.378”]	07.27-6.7.35P	31 g	[0.070 lb]	350

Clips for NBK Terrart-Clad

AW 6063 T66
Painted, holes for Ø5 mm [3/16" dia.],
and includes gasket as standard

The clips are powder-coated in RAL 7021, Class 1 Qualicoat as standard. Special RAL colours and other Qualicoat classes, as well as anodized thicknesses and finishes, upon request

For the clip-to-profile connection use A2 (304) self-drilling screws ø5x32 mm [3/16" x 1 1/4"]

Gasket material: PVC

MID

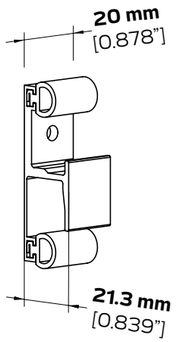

STARTER

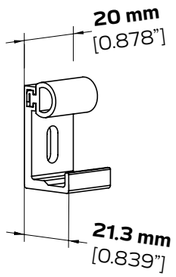

TOP

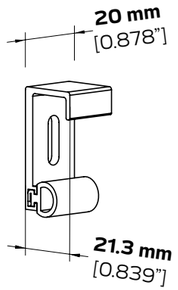

Clips	Item No.	Weight/pc		Package box
Mid	07.21-1.5.20P	13 g	[0.030 lb]	400
Starter	07.21-2.513.20P	9 g	[0.021 lb]	400
Top	07.21-3.517.20P	10 g	[0.023 lb]	400

Leave your notes here

LUHA
FAÇADE SOLUTIONS

Showroom Location

550 Vandalia Street, Suite 202,
Saint Paul, Minnesota 55114, US
Office: + 1 (651) 802-4649

iljа@luhabuild.com

Q-VENT

q-vent.com